GC32130

COMPACT 5-IN-ONE IRONING SYSTEM

Engineered for medium- and high-volume laundries where space is at a premium, the Compact 5-in-One Ironing System not only features a compact design, it quickly feeds, irons, folds, stacks and accumulates at speeds of up to 49-feet-per-minute — improving PPOH (pounds per operator hour).

FEED The Compact automatically adjusts feeding speed for one or two operators.

DRY The Compact's heat output allows for ironed linens without dryer preconditioning.

IRON The Compact's roller surface and interwoven straps ensure a high-quality and consistent finish.

FOLD The Compact can fold up to 3 cross folds using 1 lane and up to 2 cross folds using 2 lanes.

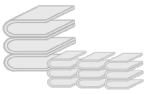

STACK & ACCUMULATE The stacker delivers consistent, high-quality stacks.

PRODUCT / FEATURES

COMPACT DESIGN

- Less space required for installation
- Increase production within a small space

KNOCK-DOWN MODEL (OPTION)

- Easily installed in existing facility
- Fits through a standard 36" doorway

CAPABILITY TO PROCESS LARGE ITEMS

- Processes large and king-sized pieces in a compact machine
- Feeds a large array — both size & shape — of linen
- Offers a wider range of laundering services to the customer
- Processes large dimension items with one operator

INTELI TOUCH-SCREEN CONTROL

- Industrial touch screens
- Intuitive icons rather than text
- Durable design
- Easy-to-use and versatile

CROSS-FOLD DESIGN

- More control over the linen
- Adapts for varying fabric thicknesses
- The high position of the cross platform and access windows allow for easier maintenance and more control, visibility and accessibility of parts and linen
- Easy maintenance
- Reduced downtime

ACCESSIBILITY

- Quick access to common parts
- Increased visibility of linen improving quality control

AUTOSPEED MODE

- Maintains an even and stable temperature throughout ironing process
- Linen is perfectly dried in one pass

INTELI CONTROL

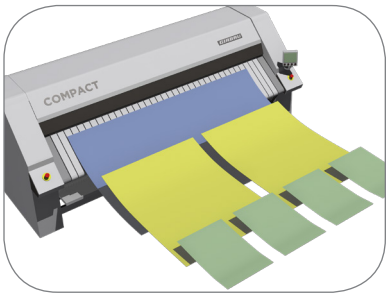

PROCESS A VARIETY OF ITEMS

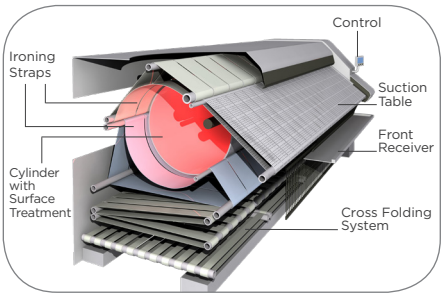

CROSS-FOLD DESIGN

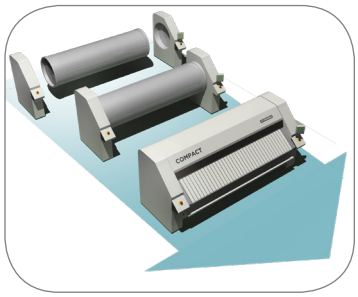

KNOCK-DOWN MODEL (OPTION)

girbauindustrial.com • (800) 256-1073
2500 State Road 44 • Oshkosh, WI 54904

GIRBAU INDUSTRIAL®

GC32130

COMPACT 5-IN-ONE IRONING SYSTEM

ARCHITECTURAL/MECHANICAL
PRODUCT SPECIFICATIONS

PRODUCT SPECS

Cylinder Diameter *inch*	32
Usable Cylinder Width *inch*	130
Evaporation Capability *gal/h*	31.7
Ironing Speed *ft/min*	9-49
Net Weight *lbs*	8047
Crated Weight *lbs*	8157
Machine Width *inch* machine only with stacker	 166.1 216.1
Machine Depth *inch* machine only with stacker with accumulator with accumulator & stacker	 89.4 113 105.1 128.7
Machine Height *inch*	80.8
Shipping Dimensions *inch* WxDxH	173.2 x 94.5 x 87.6
Feed Height *inch*	43.3
Electrical Draw *Amp*	*see table below*
Exhaust Diameter (x2) *inch*	4.9
Exhaust Pressure	max inch W.C. 1.18
Gas Connection *inch* Natural Propane	 1 3/4
Gas Heating *BTU/h*	424,500
Gas Supply Pressure	1 – 7 PSI
Compressed Air Connection *inch*	1/2 NPT ID
Compressed Air Flow *cfm*	15 @ 116 PSI

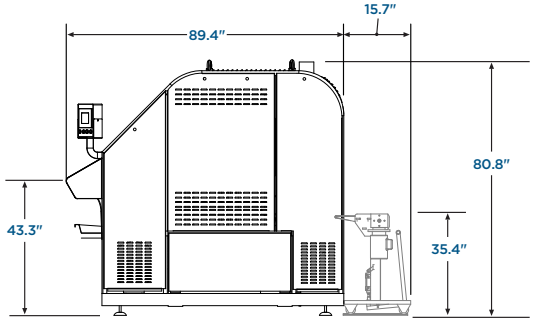

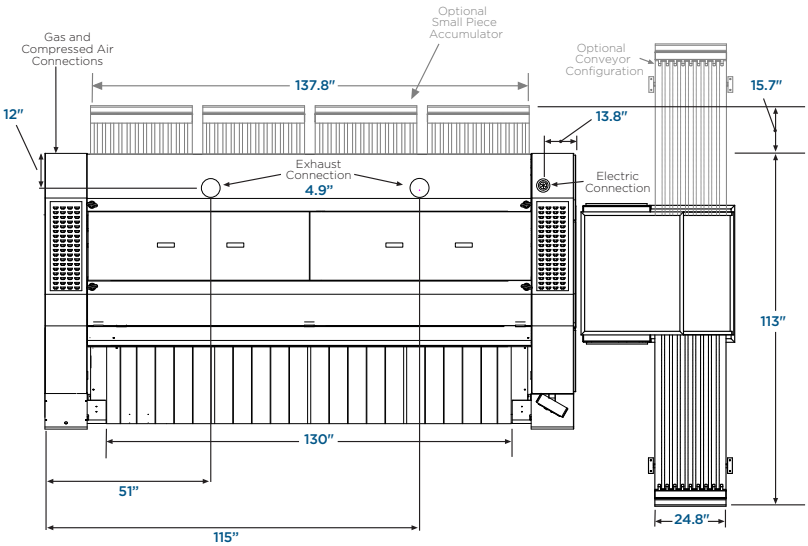

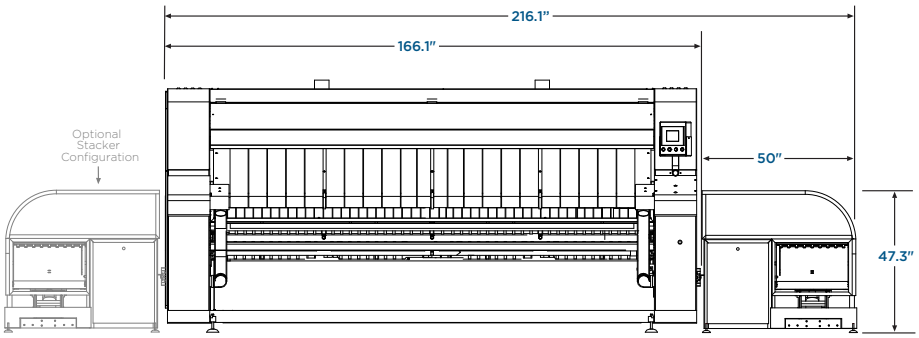

ELECTRICAL CONSUMPTION

	208V	220V	240V	400V	440V	480V
GC24	27.69A	26.18A	24.00A	14.40A	13.09A	12.00A
GC32	29.61A	28.00A	25.66A	15.40A	14.00A	12.83A
MULTI-LANE *(option)*	+3.65A	+3.45A	+3.17A	+1.90A	+1.73A	+1.58A
STACKER *(option)*	+3.65A	+3.45A	+3.17A	+1.90A	+1.73A	+1.58A
FEEDER *(option)*	+2.73A	+2.58A	+2.37A	+1.42A	+1.29A	+1.18A
REAR STACKER *(option)*	+2.12A	+2.00A	+1.83A	+1.10A	+1.00A	+0.92A

* Specifications subject to change without notice or obligation. Contact Girbau Industrial at (800) 256-1073 for dimensions not shown or for clarification.

girbauindustrial.com • (800) 256-1073
2500 State Road 44 • Oshkosh, WI 54904

GIRBAU INDUSTRIAL®